Dimensional Drawing -
Note: Unless otherwise specified, dimensions are nominal values in millimeters (inches referenced).

MicroPirani Sensor

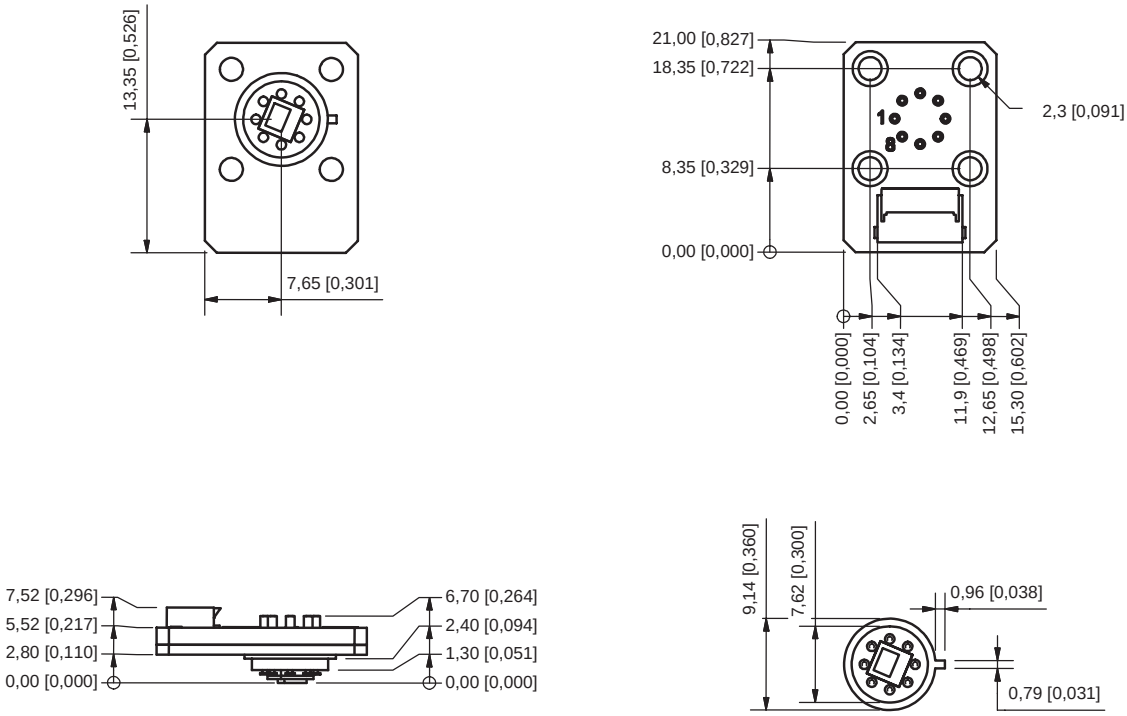

Dimensions: Millimeters (Inches)

Electronics Module

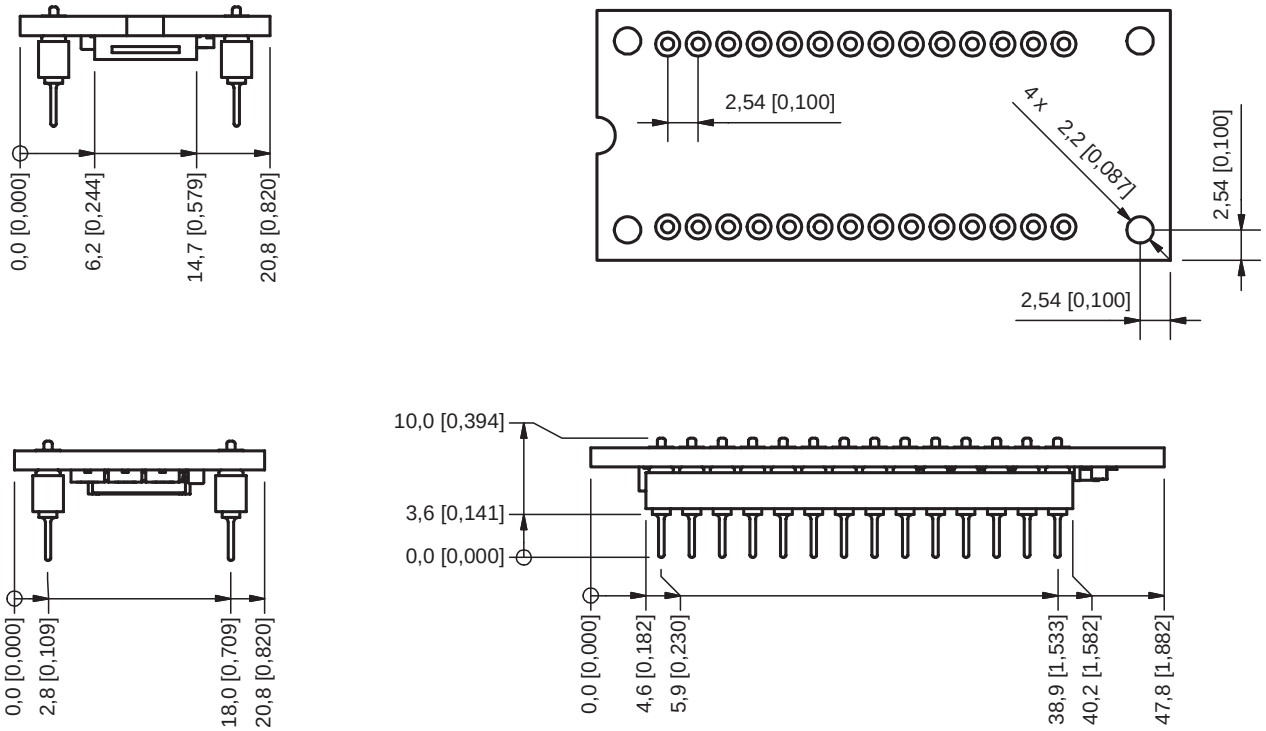

Dimensions: millimeters (inches)